micro-ROS - ROS 2 into microcontrollers

Jaime Martín Losa - eProsima

JaimeMartin@eProsima.com

Agenda

- What is OFERA?
- What is Micro-ROS?
- Success. How we did it?
- Impact
- Future

What is OFERA?
The EU Project behind Micro-ROS:
ROS 2 for Microcontrollers

OFERA

eProsima
The Middleware Experts

BOSCH

FIWARE

Łukasiewicz
Przemysłowy Instytut Automatyki
i Pomiarów PIAP

OFERA -> Micro-ROS

- The EU project Ends, BUT
- Micro-ROS continues!
  - Open Source community
  - Business Ecosystem
  - eProsima already supporting commercial customers.

What is micro-ROS?

ROS 2 in Microcontrollers. Same API, Same Messages.

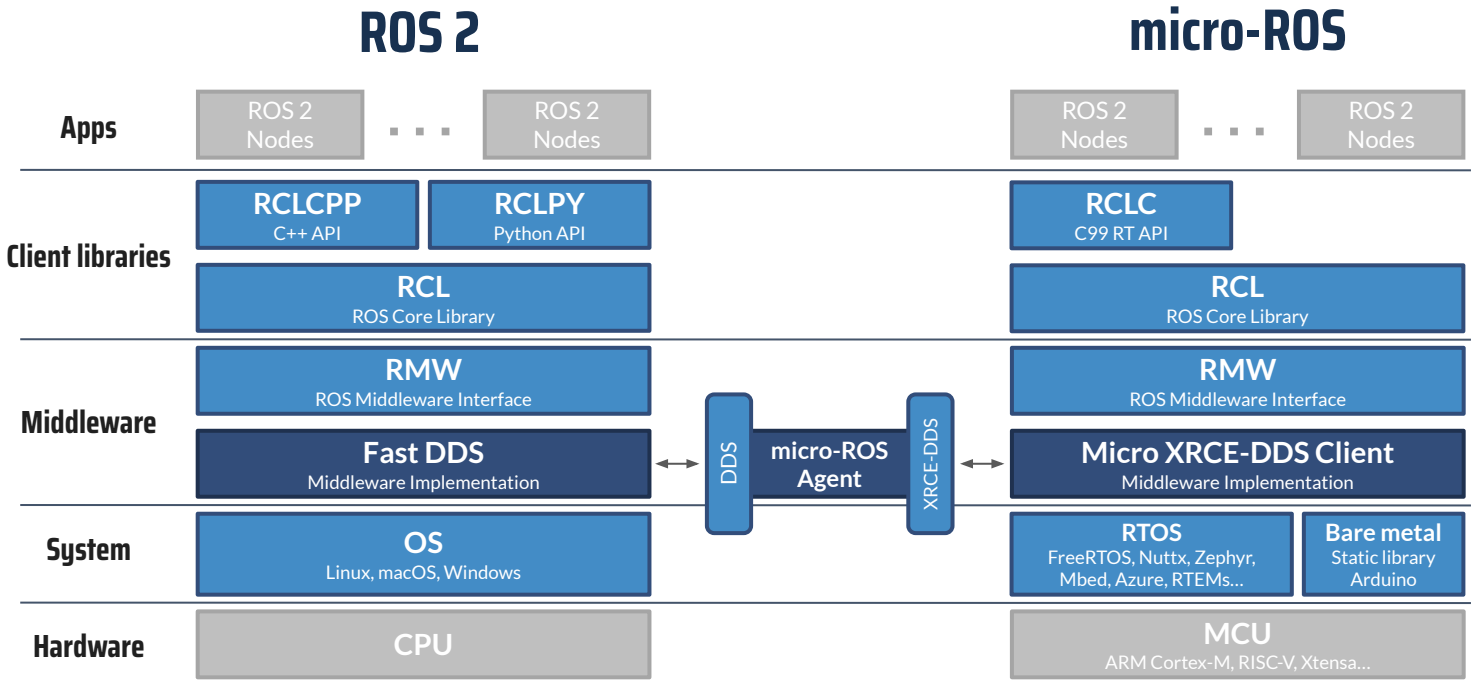

Reasons for success

1.- It Works!

Support: The platforms people really use

OFERA

freeRTOS · RT-Thread · ESPRESSIF · Azure · RENESAS RA

NuttX · Zephyr™ Project · ARDUINO · ARM mbed · STM32 CubeIDE · RTEMS™

2022 — 2023 — 2024

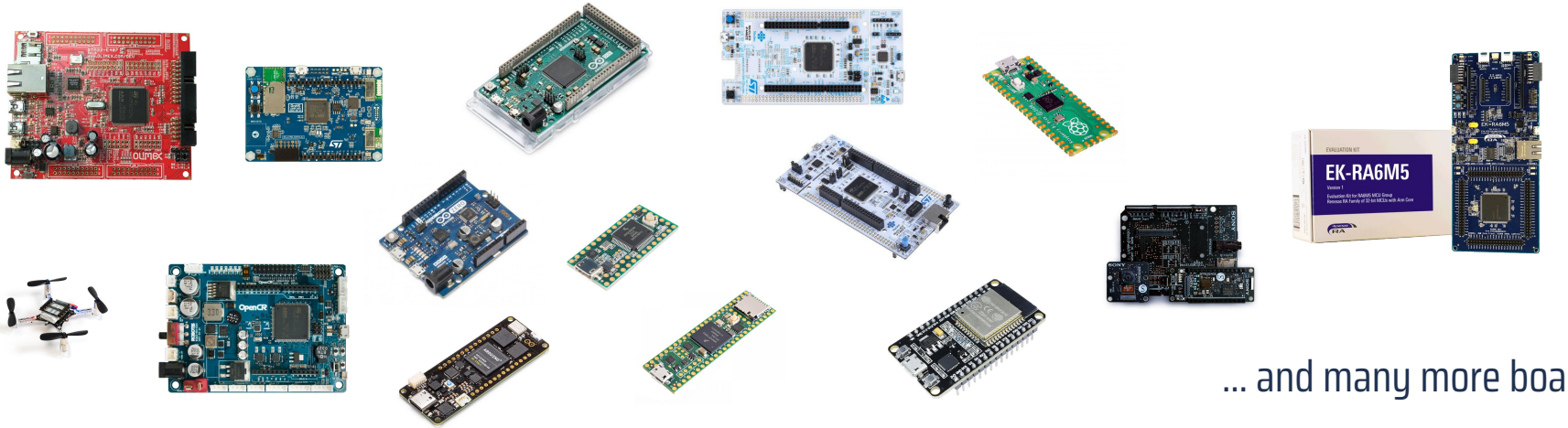

... and many more boards

2.- Adoption:

Repo clones in 2022

262.770!

What?
How is this possible?
262.770!

Well, we use some Jedi Tricks

1 Post per week
1 Tutorial per month
Monthly Embedded Working Group
Twitter, linkedin,
ROS Discourse, Press Releases
Events: ROSCON, ROS World, ERF

OFERA

Community Success Cases

ROS 2 Embedded Working Group (EWG): monthly meeting: users and partners

- Presentation about embedded & micro-ROS topics
- Presentation or discussion about new features and bugs
- Miscelanea section, community questions...

They are recorded and published on ROS Discourse #embedded

Developers, Developers, Developers, Developers, Developers, DEVELOPERS!, Developers, Developers, Developers, Developers, DEVELOPERS!!

Micro-ROS Dev Support

- Easy to use.
- Really good Documentation
  - Tutorials, videos, use cases
- Always updated.
  - Same ROS 2 release cycle.

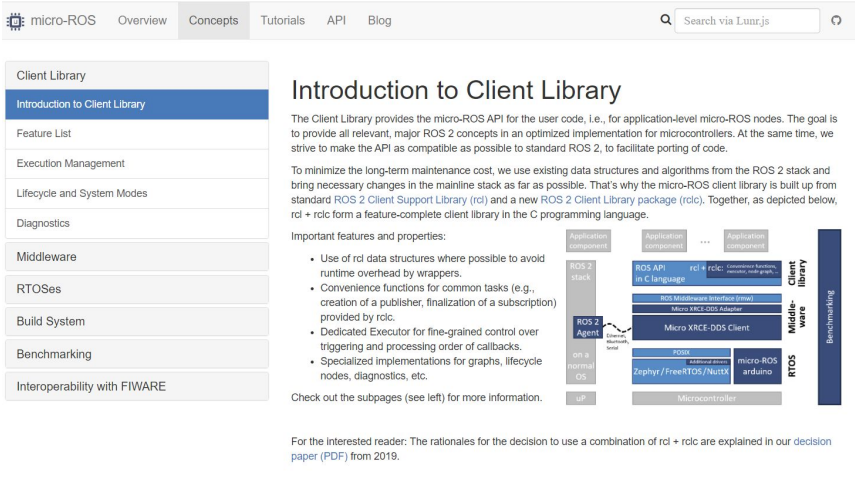

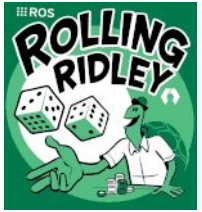

And yes, we make money with this!

Commercial Success Cases

CAPRA ROBOTICS - UK Agritech

Mobile platforms - Capra Hircus

Usage of micro-ROS for the real time controllers.

You can see it in action HERE today!

Commercial Success Cases

RENESAS - Japan silicon

Global leader in microcontrollers, analog, power and SoC products.
Official reference board provider for micro-ROS: RA Family

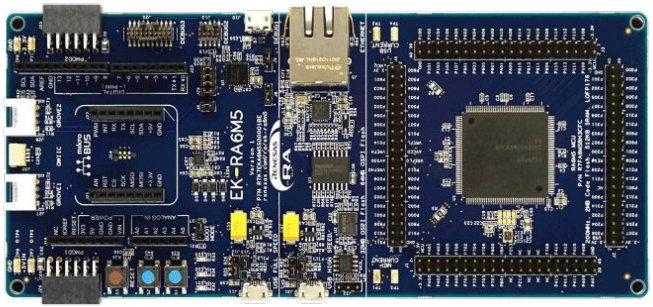

Commercial Success Cases

RENESAS - Today at Embedded world

(March 14-16)

Commercial Success Cases

OFERA

GARDIN - UK Agritech

Farm optimization via image recognition.

Usage of micro-ROS for the low level controlling of their sensors.

GARDIN

EU Impact:

micro-ROS now is a key component of ROS 2: Huge impact!

Europe has a leading role in the de facto standard for Robotics.
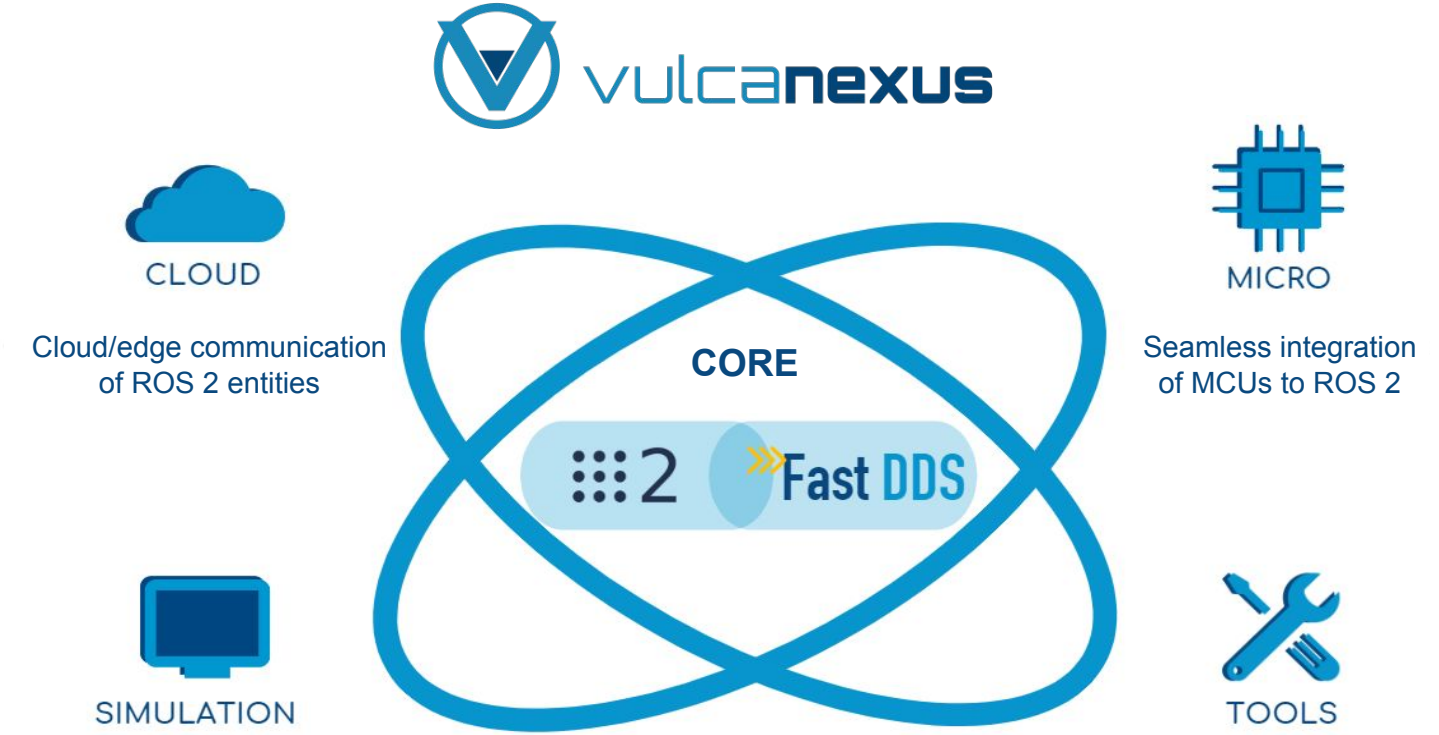
Future: Fully European ROS Distro